ProLine

0.5 / 1 / 1.5 DFC VE-9/18/24/36
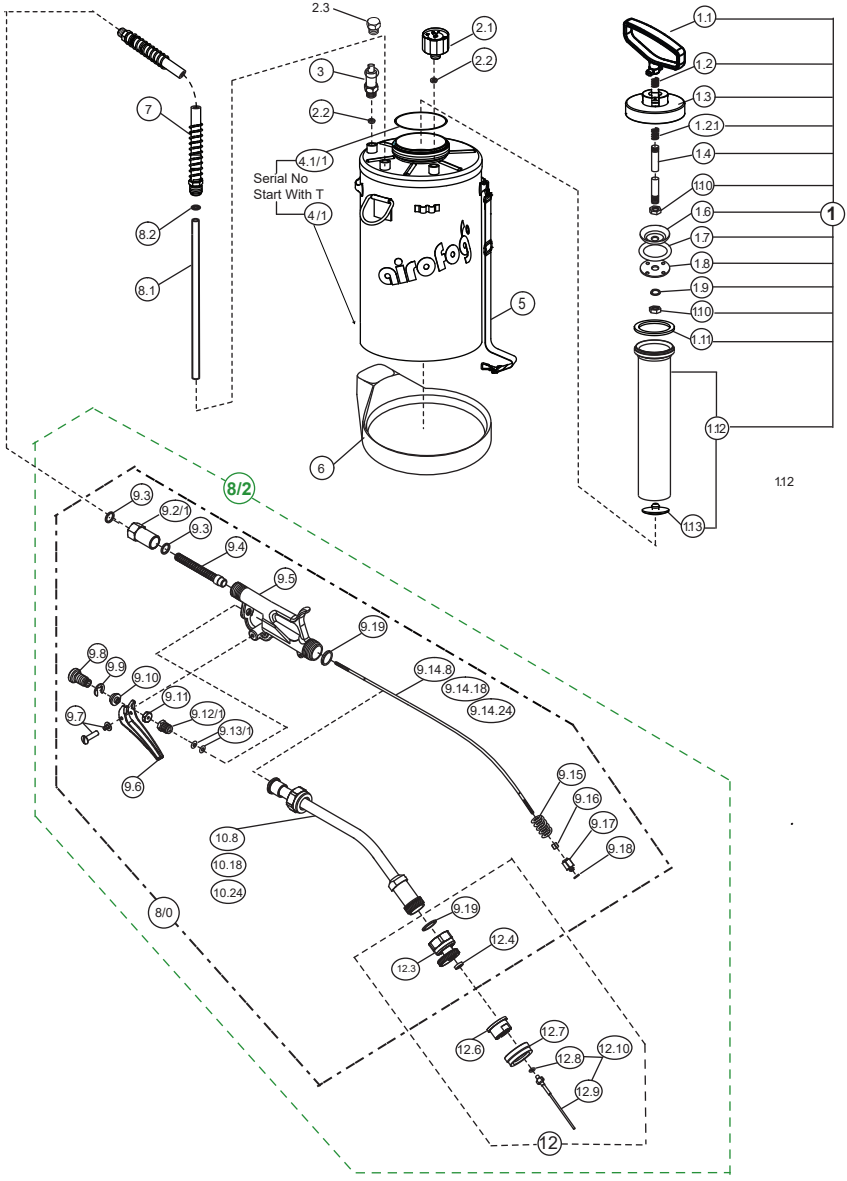
Parts not interchangeable with competitors